SICOM3048 Industrial Ethernet Switch

Hardware Installation Manual

KYLAND

Kyland Technology Co., Ltd.

Publication Date: Apr. 2013

Version: V2.2

FAX: +86-10- 88796678

Website: http://www.kyland.com

E-mail: support@kyland.com

SICOM3048 Industrial Ethernet Switch

Hardware Installation Manual

Disclaimer: Kyland Technology Co., Ltd. tries to keep the content of this manual as accurate and as updated as possible. This document is not guaranteed to be error-free, and we reserve the right to amend it without notice to users.

All rights reserved.

No part of this documentation may be excerpted, reproduced, translated, annotated or duplicated, in any form or by any means without the prior written permission of KYLAND Corporation.

Copyright © 2013 Kyland Technology Co., Ltd.

Notice for Safety Operation

The product performs reliably as long as it is used according to the guidance. Artificial damage or destruction of the device should be avoided. Before using the device, read this notice carefully for personal and equipment safety. Please keep the manual for further reference. Kyland is not liable to any personal or equipment damage caused by violation of this notice.

- Do not place the device near water sources or damp areas. Keep the ambient relative humidity within the range from 5% to 95% (non-condensing).
- Do not place the device in an environment with high magnetic field, strong shock, or high temperature. Keep the working and storage temperatures within the allowed range.
- Install and place the device securely and firmly.
- Please keep the device clean; if necessary, wipe it with soft cotton cloth.
- Do not place any irrelevant materials on the device or cables. Ensure adequate heat dissipation and tidy cable layout without knots.
- Wear antistatic gloves or take other protective measures when operating the device.
- Avoid any exposed metal wires because they may be oxidized or electrified.
- Install the device in accordance with related national and local regulations.
- Before power-on, make sure the power supply is within the allowed range of the device. Overhigh voltage may damage the device.
- Power connectors and other connectors should be firmly interconnected.
- Do not plug in or out the power supply with wet hands. When the device is powered on, do not touch the device or any parts with wet hands.
- Before operating a device connected to a power cable, remove all jewelries (such as rings, bracelets, watches, and necklaces) or any other metal objects, because they may cause electric shock or burns.
- Do not operate the device or connect or disconnect cables during lightning.
- Use compatible connectors and cables. If you are not sure, contact our sales or technical support personnel for confirmation.
- Do not disassemble the device by yourself. When an anomaly occurs, contact our sales or technical support personnel.

- If any part is lost, contact our sales or technical support personnel to purchase the substitute. Do not purchase parts from other channels.
- Dispose of the device in accordance with relevant national provisions, preventing environmental pollution.

In the following cases, please immediately shut down your power supply and contact your Kyland representative:

- Water gets into the equipment.
- Equipment damage or shell damage.
- Equipment operation or performance has abnormally changed.
- The equipment emits odor, smoke or abnormal noise.

Contents

1 Product Overview 1
2 Structure and Interface 3
2.1 Front Panel 3
2.2 Rear Panel 5
2.2.1 Rear Panel 5
2.2.2 Interface Modules 6
3 Mounting 11
3.1 Dimension Drawing 11
3.2 Mounting Modes and Steps 11
4 Interface Module Installation 14
4.1 Mounting 14
4.2 Dismounting 16
5 Connection 17
5.1 10/100Base-T(X) Ethernet Port 17
5.2 100Base-FX Ethernet Port 18
5.3 1000Base-X SFP Slot 19
5.3.1 Gigabit SFP Optical Module 19
5.4 Console Port 21
5.5 Grounding 21
5.6 Power Terminal Block 22
6 LEDs 25
7 Switch Access 27
7.1 Access through Console Port 27
7.2 Access through Telnet 29
7.3 Access through Web 30

8 Basic Features and Specifications 31

1 Product Overview

SICOM3048 includes a series of high-performance gigabit industrial Ethernet switches developed by Kyland particularly for industrial applications.

SICOM3048 adopts modular design and provides a variety of ports. It is applicable to harsh and hazardous industrial environments due to the high-performance switching engine, solid closed housing, fanless but heat dissipation-capable single-rib shaped chassis, overcurrent, overvoltage, and EMC protection for power input, and sound EMC protection of RJ45 ports.

SICOM3048 provides powerful network management functions and can be managed through CLI, Telnet, Web, and SNMP-based network management software.

The series switches support 19 inch 2U rack mounting by front panel. The rear panel provides up to four 1000Base-X SFP slots, twenty-four 10/100Base-T(X) Ethernet ports, and four 0.5U interface module slots.

Table 1 SICOM3048 Models

Model	**Port**		**Slot**	**Power Supply**
	1000Base-X SFP slot	10/100Base-T(X) Ethernet port	**0.5U slot**	
SICOM3048-4GX-24T-MB	4	24	4	24DC, 48DC, 110DC, 220AC/DC (single power supply)
SICOM3048-24T-MB	--	24	4	

Table 2 Interface Modules for SICOM3048

Model	**Port**		**Remarks**
	100Base-FX Ethernet port	10/100Base-T(X) Ethernet port	
SM3.2-6S/M	6	--	0.5U interface module
SM3.2-5S/M-1T	5	1	
SM3.2-4S/M-2T	4	2	
SM3.2-3S/M-3T	3	3	
SM3.2-2S/M-4T	2	4	
SM3.2-1S/M-5T	1	5	
SM3.2-6T	--	6	

Note:

For the product information listed in this table, we reserve the right to amend it without notice to users.

To obtain the latest information, you can contact our sales or technical support personnel.

2 Structure and Interface

Caution:

To keep ports clean and ensure switch performance, you are advised to purchase the port dustproof shield (optional).

SICOM3048 includes two models: SICOM3048-4GX-24T-MB and SICOM3048-24T-MB.

The front and rear panel identifiers of SICOM3048-4GX-24T-MB are identical with those of SICOM3048-24T-MB. SICOM3048-4GX-24T-MB provides 1000Base-X SFP slots, while the 1000Base-X SFP slots on SICOM3048-24T-MB rear panel are covered by blind plates and cannot be used.

2.1 Front Panel

- Front Panel of SICOM3048-4GX-24T-MB

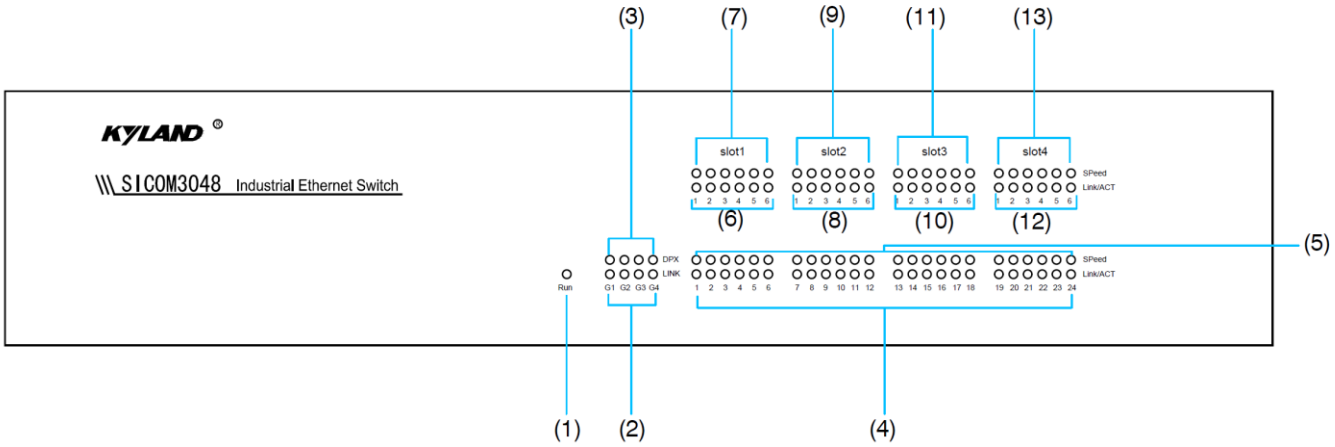

Figure 1 Front Panel of SICOM3048-4GX-24T-MB

Table 3 Description of the Front Panel of SICOM3048-4GX-24T-MB

No.	Identifier	Description
(1)	Run	Running LED
(2)	(G1-G4): LINK	Connection status LEDs for four 1000Base-X SFP slots
(3)	(G1-G4): DPX	Speed LEDs for four 1000Base-X SFP slots
(4)	(1-24): Link/ACT	Connection status LEDs for twenty-four 10/100Base-T(X) Ethernet ports
(5)	(1-24): SPeed	Speed LEDs for twenty-four 10/100Base-T(X) Ethernet ports
(6)	slot1: (1-6): Link/ACT	Connection status LEDs for the six 100M ports on the interface module in slot 1

(7)	slot1: (1-6): SPeed	Speed LEDs for the six 100M ports on the interface module in slot 1
(8)	slot2: (1-6): Link/ACT	Connection status LEDs for the six 100M ports on the interface module in slot 2
(9)	slot2: (1-6): SPeed	Speed LEDs for the six 100M ports on the interface module in slot 2
(10)	slot3: (1-6): Link/ACT	Connection status LEDs for the six 100M ports on the interface module in slot 3
(11)	slot3: (1-6): SPeed	Speed LEDs for the six 100M ports on the interface module in slot 3
(12)	slot4: (1-6): Link/ACT	Connection status LEDs for the six 100M ports on the interface module in slot 4
(13)	slot4: (1-6): SPeed	Speed LEDs for the six 100M ports on the interface module in slot 4

- Front Panel of SICOM3048-24T-MB

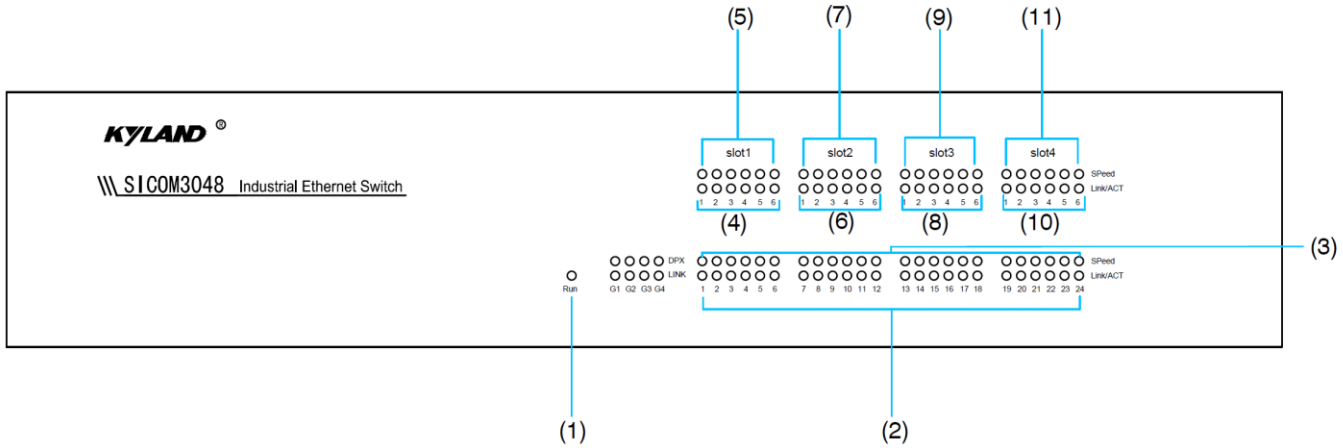

Figure 2 Front Panel of SICOM3048-24T-MB

Table 4 Description of the Front Panel of SICOM3048-24T-MB

No.	Identifier	Description
(1)	Run	Running LED
(2)	(1-24): Link/ACT	Connection status LEDs for twenty-four 10/100Base-T(X) Ethernet ports
(3)	(1-24): SPeed	Speed LEDs for twenty-four 10/100Base-T(X) Ethernet ports
(4)	slot1: (1-6): Link/ACT	Connection status LEDs for the six 100M ports on the interface module in slot 1
(5)	slot1: (1-6): SPeed	Speed LEDs for the six 100M ports on the interface module in slot 1
(6)	slot2: (1-6): Link/ACT	Connection status LEDs for the six 100M ports on the interface module in slot 2
(7)	slot2: (1-6): SPeed	Speed LEDs for the six 100M ports on the interface module in slot 2
(8)	slot3: (1-6): Link/ACT	Connection status LEDs for the six 100M ports on the interface module in slot 3
(9)	slot3: (1-6): SPeed	Speed LEDs for the six 100M ports on the interface module in slot 3
(10)	slot4: (1-6): Link/ACT	Connection status LEDs for the six 100M ports on the interface module in slot 4

(11)	slot4: (1-6): SPeed	Speed LEDs for the six 100M ports on the interface module in slot 4

2.2 Rear Panel

2.2.1 Rear Panel

- Rear Panel of SICOM3048-4GX-24T-MB

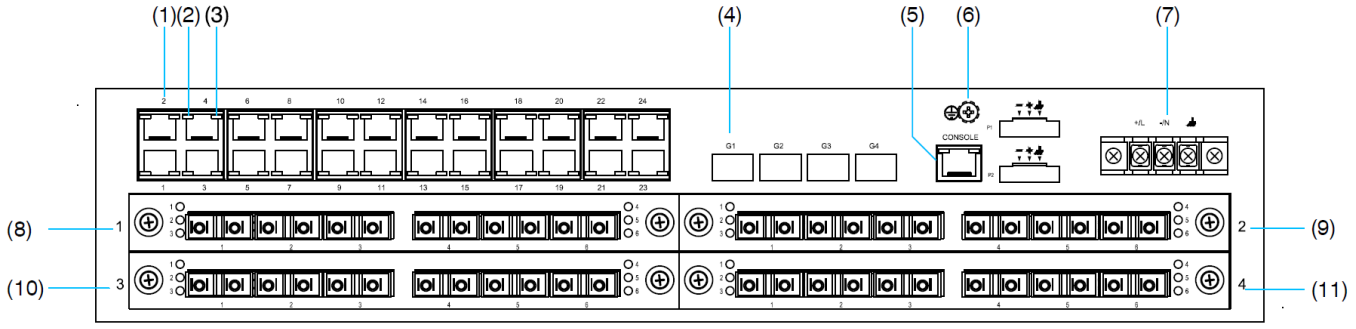

Figure 3 Rear Panel of SICOM3048-4GX-24T-MB

Table 5 Description of the Rear Panel of SICOM3048-4GX-24T-MB

No.	Identifier	Description
(1)	1-24	Twenty-four 10/100Base-T(X) Ethernet ports
(2)	--	10/100Base-T(X) Ethernet port speed LED
(3)	--	10/100Base-T(X) Ethernet port connection status LED
(4)	G1-G4	Four 1000Base-X SFP slots
(5)	CONSOLE	Console port
(6)	⏚	Grounding screw
(7)	+/L -/N	Power terminal block
(8)	1	Interface module slot 1
(9)	2	Interface module slot 2
(10)	3	Interface module slot 3
(11)	4	Interface module slot 4

- Rear Panel of SICOM3048-24T-MB

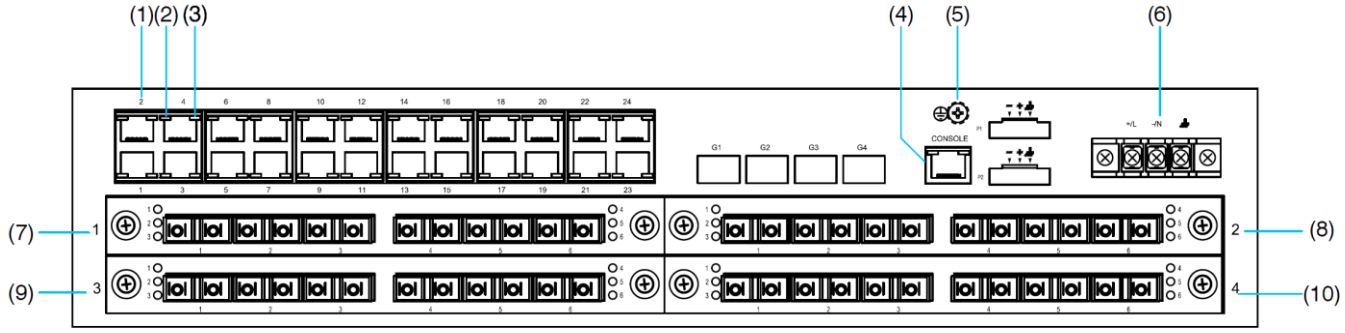

Figure 4 Rear Panel of SICOM3048-24T-MB

Table 6 Description of the Rear Panel of SICOM3048-24T-MB

No.	Identifier	Description
(1)	1-24	Twenty-four 10/100Base-T(X) Ethernet ports
(2)	--	10/100Base-T(X) Ethernet port speed LED
(3)	--	10/100Base-T(X) Ethernet port connection status LED
(4)	CONSOLE	Console port
(5)	⏚	Grounding screw
(6)	+/L -/N ⏚	Power terminal block
(7)	1	Interface module slot 1
(8)	2	Interface module slot 2
(9)	3	Interface module slot 3
(10)	4	Interface module slot 4

2.2.2 Interface Modules

- SM3.2-6S/M

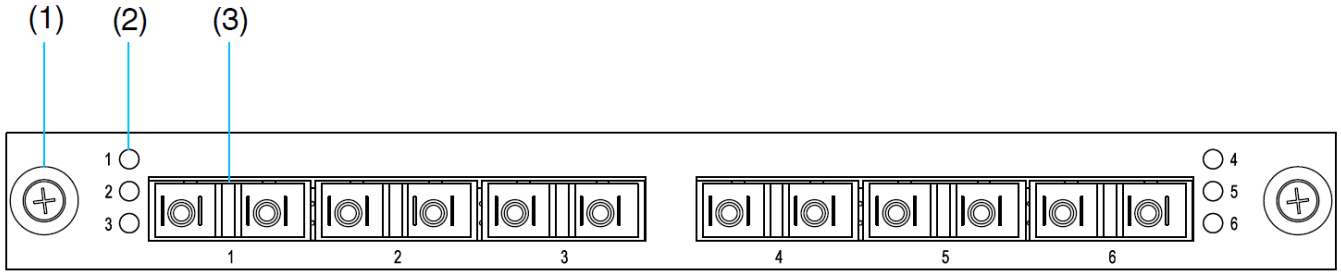

Figure 5 SM3.2-6S/M

Table 7 Description of SM3.2-6S/M

No.	Identifier	Description
(1)	--	Mounting screw

(2)	1-6	100M port connection status LEDs
(3)	1-6	100Base-FX Ethernet ports

Note:

The 100M port connection status LEDs indicate the connection statuses of the ports with the same identifiers.

- SM3.2-5S/M-1T

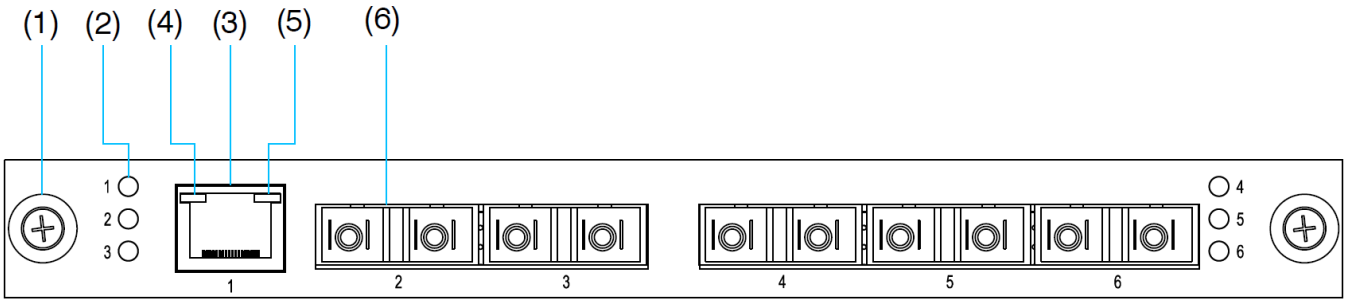

Figure 6 SM3.2-5S/M-1T

Table 8 Description of SM3.2-5S/M-1T

No.	Identifier	Description
(1)	--	Mounting screw
(2)	1-6	100M port connection status LEDs
(3)	1	10/100Base-T(X) Ethernet port
(4)	--	10/100Base-T(X) Ethernet port speed LED
(5)	--	10/100Base-T(X) Ethernet port connection status LED
(6)	2-6	100Base-FX Ethernet port

Note:

The 100M port connection status LEDs indicate the connection statuses of the ports with the same identifiers.

- SM3.2-4S/M-2T

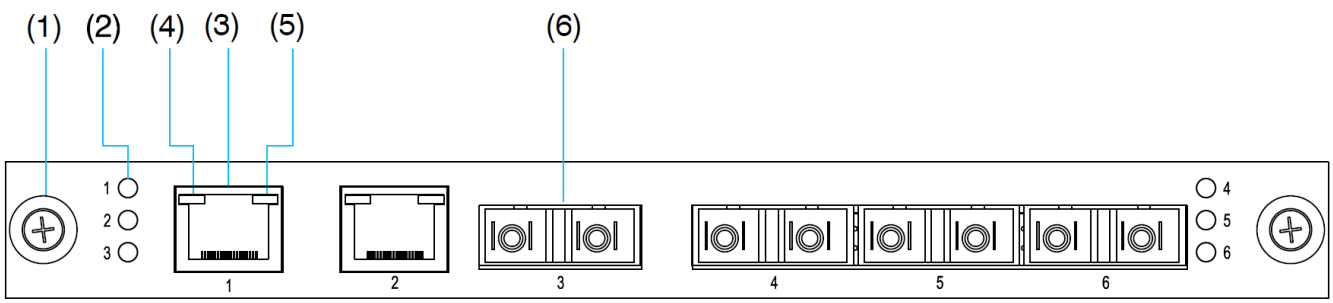

Figure 7 SM3.2-4S/M-2T

Table 9 Description of SM3.2-4S/M-2T

No.	Identifier	Description
(1)	--	Mounting screw
(2)	1-6	100M port connection status LEDs
(3)	1-2	10/100Base-T(X) Ethernet ports
(4)	--	10/100Base-T(X) Ethernet port speed LED
(5)	--	10/100Base-T(X) Ethernet port connection status LED
(6)	3-6	100Base-FX Ethernet ports
Note: The 100M port connection status LEDs indicate the connection statuses of the ports with the same identifiers.		

- SM3.2-3S/M-3T

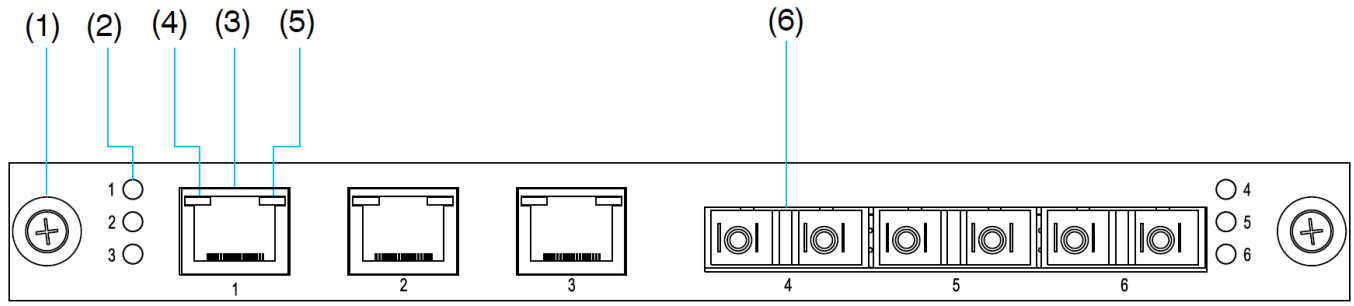

Figure 8 SM3.2-3S/M-3T

Table 10 Description of SM3.2-3S/M-3T

No.	Identifier	Description
(1)	--	Mounting screw
(2)	1-6	100M port connection status LEDs
(3)	1-3	10/100Base-T(X) Ethernet ports
(4)	--	10/100Base-T(X) Ethernet port speed LED
(5)	--	10/100Base-T(X) Ethernet port connection status LED
(6)	4-6	100Base-FX Ethernet port
Note: The 100M port connection status LEDs indicate the connection statuses of the ports with the same identifiers.		

- SM3.2-2S/M-4T

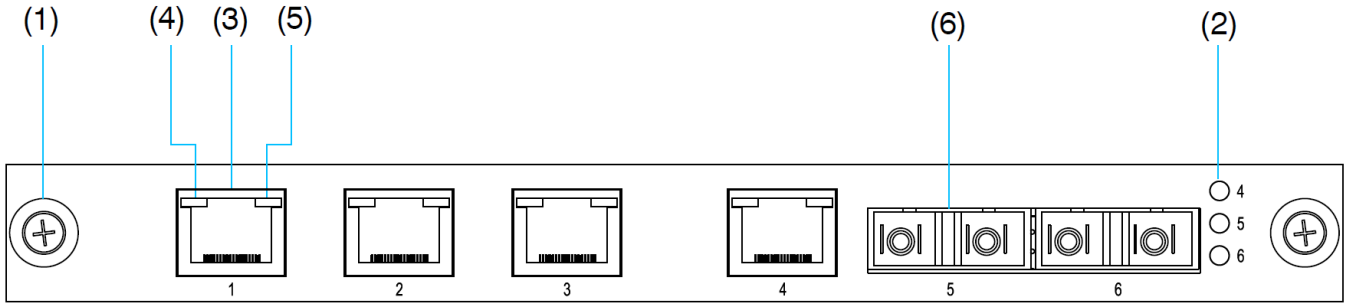

Figure 9 SM3.2-2S/M-4T

Table 11 Description of SM3.2-2S/M-4T

No.	Identifier	Description
(1)	--	Mounting screw
(2)	4-6	100M port connection status LEDs
(3)	1-4	10/100Base-T(X) Ethernet ports
(4)	--	10/100Base-T(X) Ethernet port speed LED
(5)	--	10/100Base-T(X) Ethernet port connection status LED
(6)	5-6	100Base-FX Ethernet ports
Note: The 100M port connection status LEDs indicate the connection statuses of the ports with the same identifiers.		

- SM3.2-1S/M-5T

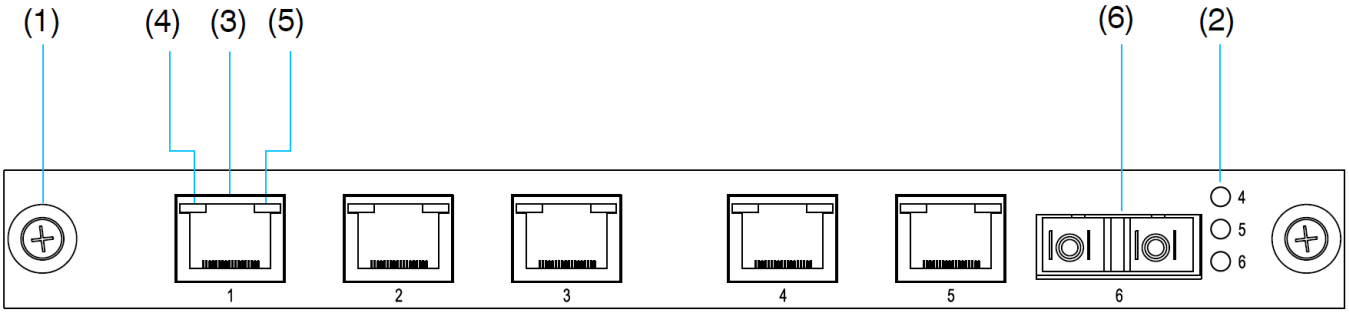

Figure 10 SM3.2-1S/M-5T

Table 12 Description of SM3.2-1S/M-5T

No.	Identifier	Description
(1)	--	Mounting screw
(2)	4-6	100M port connection status LEDs

(3)	1-5	10/100Base-T(X) Ethernet ports
(4)	--	10/100Base-T(X) Ethernet port speed LED
(5)	--	10/100Base-T(X) Ethernet port connection status LED
(6)	6	100Base-FX Ethernet port

Note:

The 100M port connection status LEDs indicate the connection statuses of the ports with the same identifiers.

- SM3.2-6T

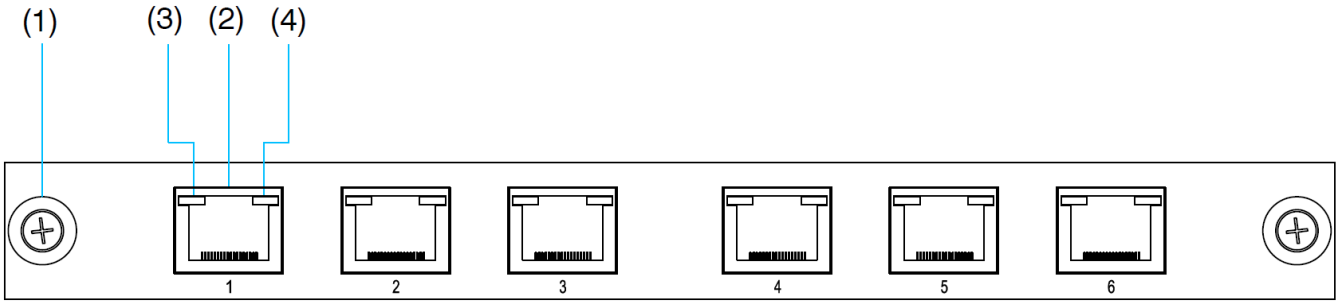

Figure 11 SM3.2-6T

Table 13 Description of SM3.2-6T

No.	Identifier	Description
(1)	--	Mounting screw
(2)	1-6	10/100Base-T(X) Ethernet ports
(3)	--	10/100Base-T(X) Ethernet port speed LED
(4)	--	10/100Base-T(X) Ethernet port connection status LED

3 Mounting

3.1 Dimension Drawing

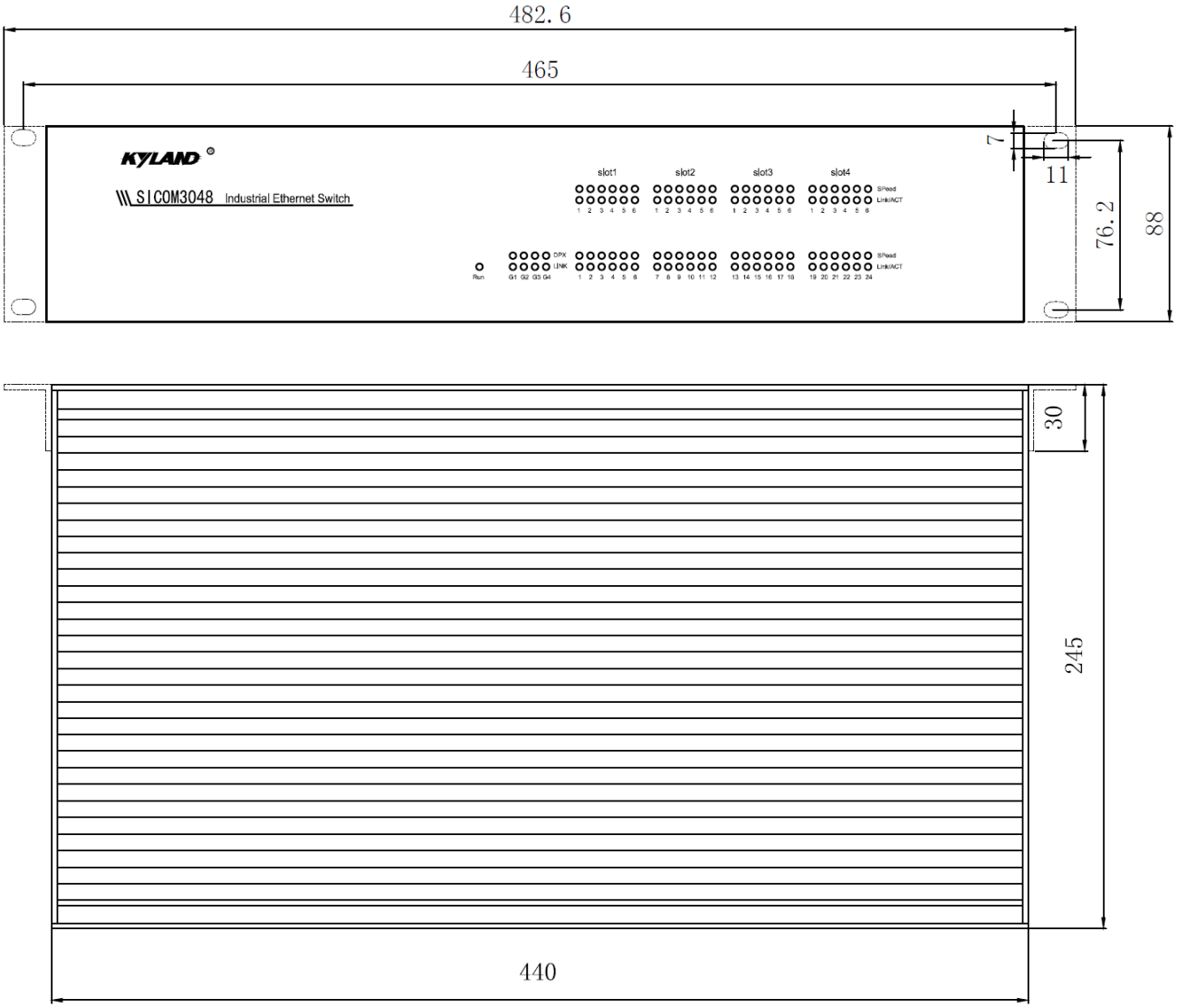

Figure 12 Dimension Drawing (unit: mm)

Caution:

- As part of the heat dissipation system, the switch housing becomes hot during operation. Please use caution when coming in contact and avoid covering the switch housing when the switch is running.
- The figures in this manual are only for reference.

3.2 Mounting Modes and Steps

The series switches support rack mounting by front panel. Before installation, make sure that the

following requirements are met.

1) Environment: temperature (-40℃ to 85℃), ambient relative humidity (5% to 95%, non-condensing)

2) Power requirement: The power input is within the voltage range of the switch.

3) Grounding resistance: <5Ω

4) No direct sunlight, distant from heat source and areas with strong electromagnetic interference.

- Installing Mounting Brackets

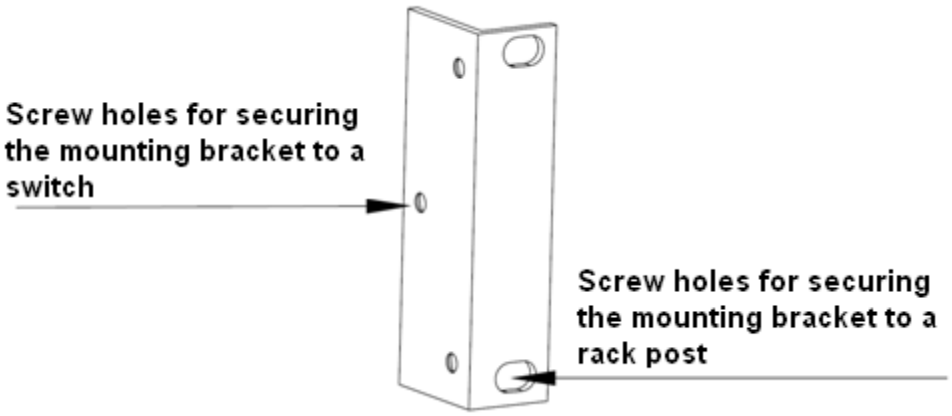

Figure 13 Mounting Bracket

You need to secure mounting brackets to the switch to complete rack mounting. If there are screws inserted in the screw holes, remove the screws and keep them for future use.

As shown in the following figure, use three screws to secure two mounting brackets to the switch respectively.

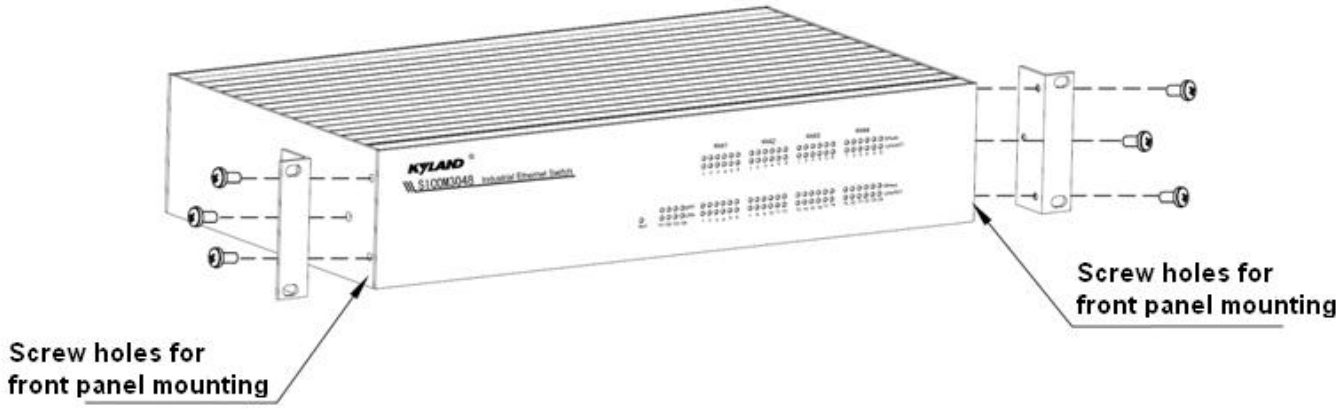

Figure 14 Installing Mounting Brackets

- Mounting

Step 1: Select the mounting position for the switch and guarantee adequate space and heat

dissipation for it (dimensions: 440mm×88mm×245mm).

Step 2: Move the switch in direction 1 until the screw holes for securing the mounting brackets to rack posts are in alignment with the corresponding holes in the rack posts. Then use four screws and supporting captive nuts to secure the mounting brackets to the rack posts.

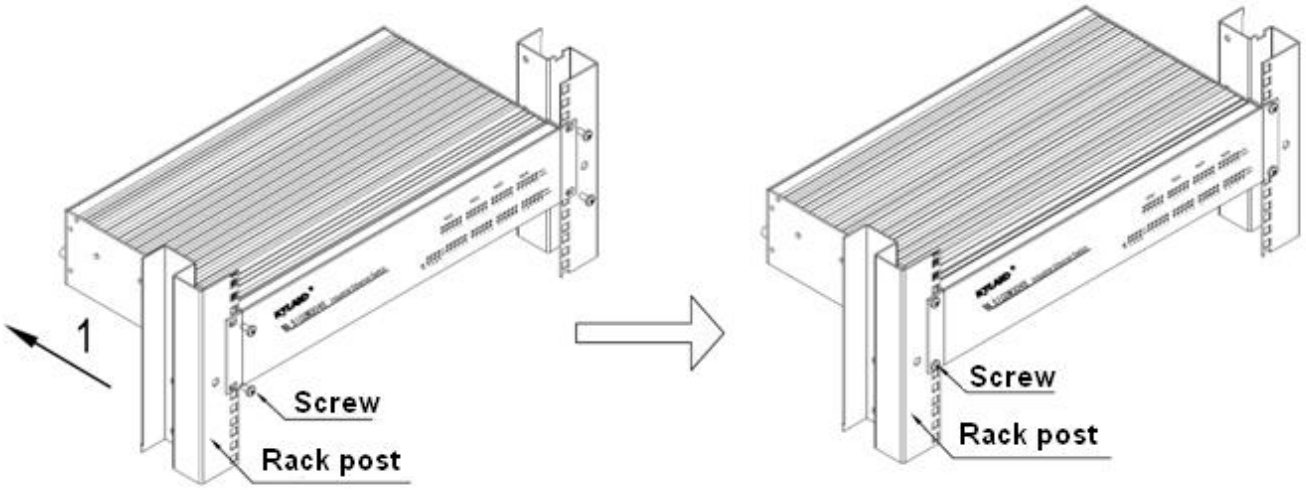

Figure 15 Mounting

- Dismounting

Step 1: Remove the four screws and supporting captive nuts securing the mounting brackets to the rack posts.

Step 2: Remove the switch from the rack posts. Then unscrew the mounting brackets to complete dismounting.

4 Interface Module Installation

Caution:

Before installing or removing an interface module, it is recommended to power off the switch.

4.1 Mounting

Step 1: Facing the rear panel of the switch, loosen the screws of a blank filler panel in counterclockwise direction to the utmost, as shown in the following figure. Remove the blank filler panel by holding the screws.

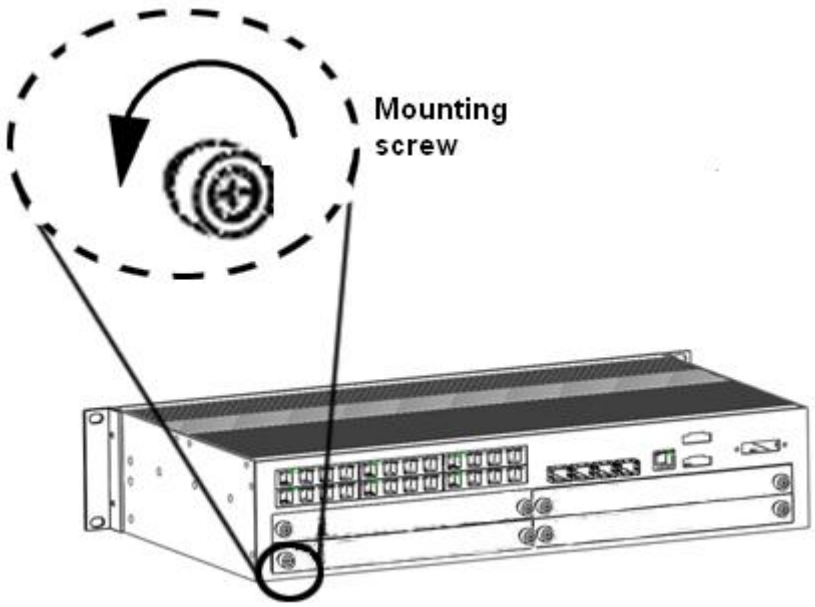

Figure 16 Interface Module Installation 1

Step 2: Hold the screws of the interface module to be inserted with two hands. Insert the module into the slot along the guide rail smoothly until the interface module is in position, as shown in the following figure.

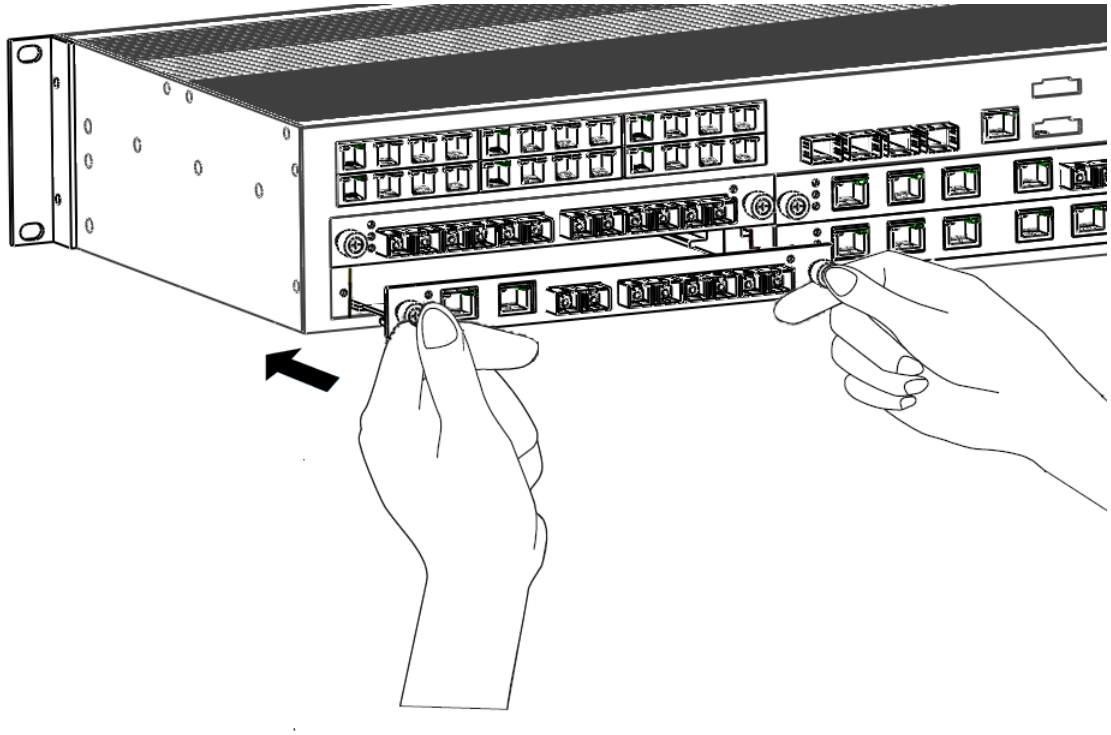

Figure 17 Interface Module Installation 2

Step 3: Tighten the screws of the interface module in the clockwise direction to secure the interface module.

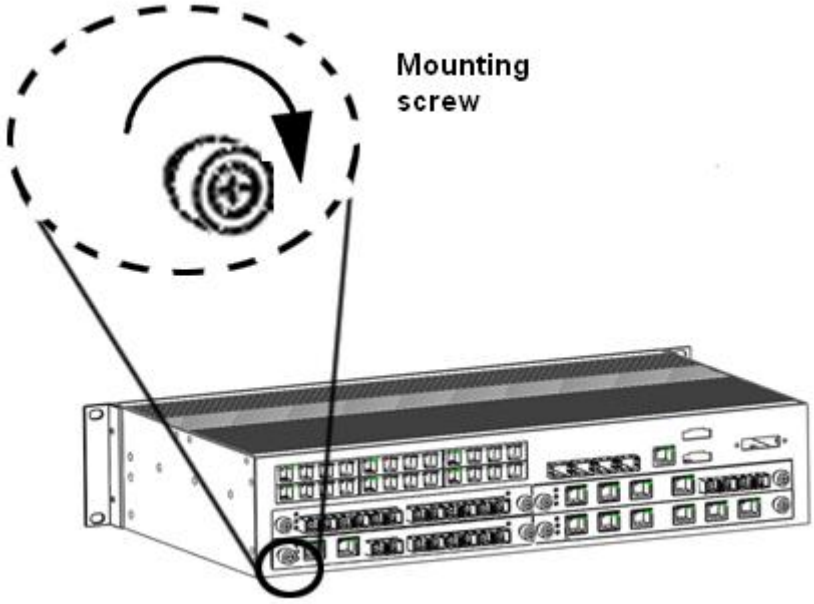

Figure 18 Interface Module Installation 3

Caution:

- Not all the slots require interface modules. You can choose appropriate slots as needed.
- Keep the removed blank filler panel for future use.

4.2 Dismounting

Detailed steps are as follows:

Step 1: Facing the interface module to be removed, loosen the screws of the interface module in the counterclockwise direction to the utmost.

Step 2: Hold the screws of the interface module with two hands. Pull the module out along the guide rail smoothly until the interface module is completely removed from the switch.

Caution:

- After you remove an interface module, you need to insert a blank filler panel into the slot to prevent dust accumulation.
- Do not rotate the mounting screws with too much force, because too much force may damage the screws.

5 Connection

5.1 10/100Base-T(X) Ethernet Port

10/100Base-T(X) Ethernet port is equipped with RJ45 connector. The port is self-adaptive. It can automatically configure itself to work in 10M or 100M state, full or half duplex mode. The port can also adapt to MDI or MDI-X connection automatically. You can connect the port to a terminal or network device with a straight-through or cross-over cable.

- Pin Definition

The following figure shows the pin numbers of the RJ45 port.

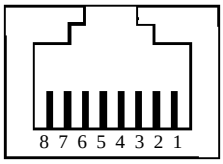

Figure 19 RJ45 Port

The following table lists the pin definitions of the 10/100Base-T(X) RJ45 port.

Table 14 Pin Definitions of 10/100Base-T(X) RJ45 Port

Pin	MDI-X Signal	MDI Signal
1	Receive Data+ (RD+)	Transmit Data+ (TD+)
2	Receive Data- (RD-)	Transmit Data- (TD-)
3	Transmit Data+ (TD+)	Receive Data+ (RD+)
6	Transmit Data- (TD-)	Receive Data- (RD-)
4, 5, 7, 8	Unused	Unused
Note: "+" and "-" indicate level polarities.		

- Wiring Sequence

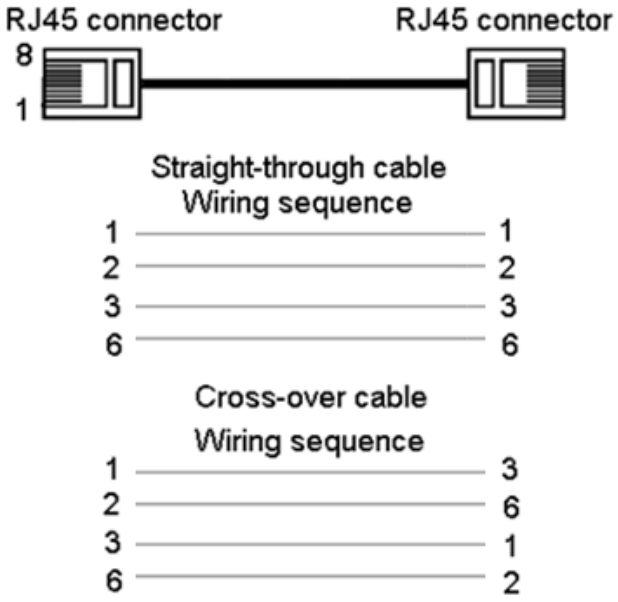

Figure 20 Connection Using Straight-through/Cross-over Cable

Note:

The color of the cable for RJ45 connector meets the 568B standard: 1-orange and white, 2-orange, 3-green and white, 4-blue, 5-blue and white, 6-green, 7-brown and white, and 8-brown.

5.2 100Base-FX Ethernet Port

100Base-FX Ethernet port is equipped with FC/ST/SC connector, and each port consists of TX (transmit) port and RX (receive) port. To enable data transmission between Device A and Device B, connect the TX port of Device A to the RX port of Device B, and the RX port of Device A to the TX port of Device B. The following uses an SC port as an example. The wiring sequence of an ST/FC port is the same with that of the SC port.

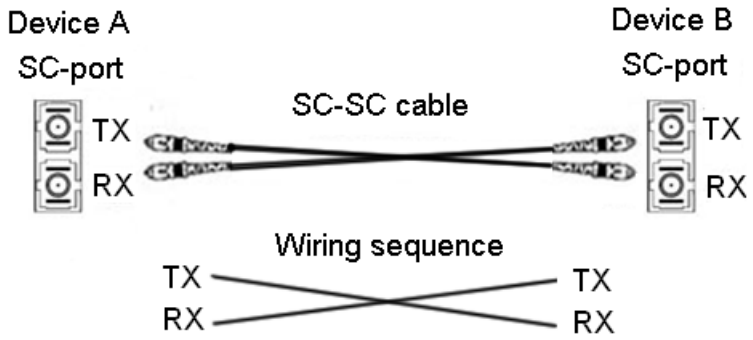

Figure 21 Connection of 100Base-FX Ethernet Port

Caution:

The device uses laser to transmit signals in fibers. The laser meets the requirements of level 1 laser products. Routine operation is not harmful to your eyes, but do not look directly at the fiber port when

the device is powered on.

5.3 1000Base-X SFP Slot

You can enable data transmission only after inserting an SFP optical module into the 1000Base-X SFP slot and connecting fibers properly. You can purchase gigabit SFP optical modules as needed. For details about applicable modules, see the following table.

Table 15 Applicable Gigabit SFP Optical Modules

Model	Port	MM/SM	Connector	Center Wavelength	Transmission Distance
IGSFP-M-SX-LC-850-0.55	1000Base-X port	MM	LC	850nm	0.55km
IGSFP-S-LX-LC-1310-10	1000Base-X port	SM	LC	1310nm	10km
IGSFP-S-LH-LC-1310-40	1000Base-X port	SM	LC	1310nm	40km
IGSFP-S-ZX-LC-1550-80	1000Base-X port	SM	LC	1550nm	80km

5.3.1 Gigabit SFP Optical Module

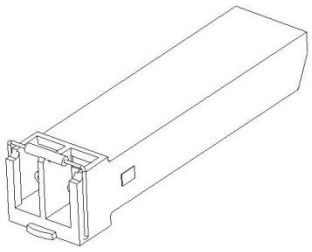

Figure 22 Gigabit SFP Optical Module

Gigabit SFP optical module is equipped with LC connector, and each port consists of a TX port and an RX port. To enable communication between Device A and Device B, connect the TX port of Device A to the RX port of Device B, and the RX port of Device A to the TX port of Device B, as shown in the following figure.

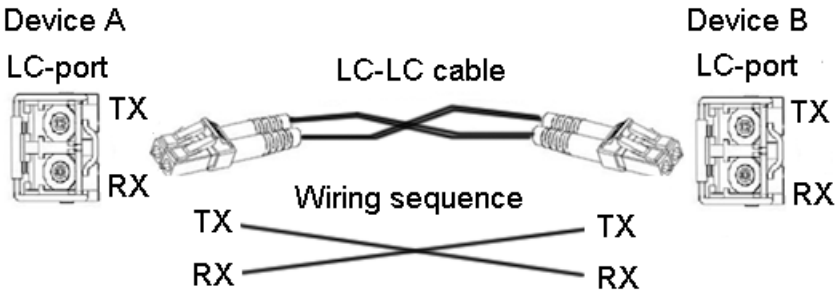

Figure 23 Connection of the Gigabit SFP Optical Module

- How to Connect the SFP Optical Module

Insert the SFP optical module into the SFP slot in the switch, and then insert the fibers into the TX port and RX port of the SFP module.

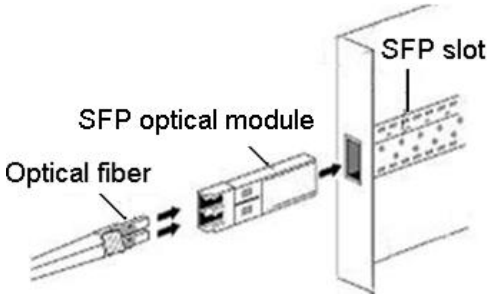

Figure 24 Connecting the SFP Optical Module

Identify the RX port and TX port of an SFP optical module:

1. Insert the two connectors in one end of two fibers into the SFP module, and those in the other end into the peer module.
2. View the corresponding connection status LED:

   If the LED is on, the connection is correct. If the LED is off, the link is not connected. This may be caused by incorrect connection of the TX and RX ports. In this case, swop the two connectors at one end of the fibers.

Caution:

- The device uses laser to transmit signals in fibers. The laser meets the requirements of level 1 laser products. Routine operation is not harmful to your eyes, but do not look directly at the fiber port when the device is powered on.
- If the defined transmission distance of an SFP module is longer than 60km, do not use a short fiber (<20km) for connection. If such a short fiber is used, the module will be burned.

5.4 Console Port

SICOM3048 provides a console port on the rear panel. Connect the 9-pin serial port of a PC to the console port of the switch with an RJ45-DB9 console cable. Then you can configure, maintain, and manage the switch by running the Hyper Terminal in the Windows OS of the computer.

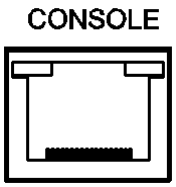

Figure 25 Console Port

- RJ45-DB9 Console Cable

One end of an RJ45-DB9 console cable is crimped RJ45 connector to be inserted into the console port of the switch, and the other end is the DB9 connector to be inserted into the 9-pin serial port of a PC.

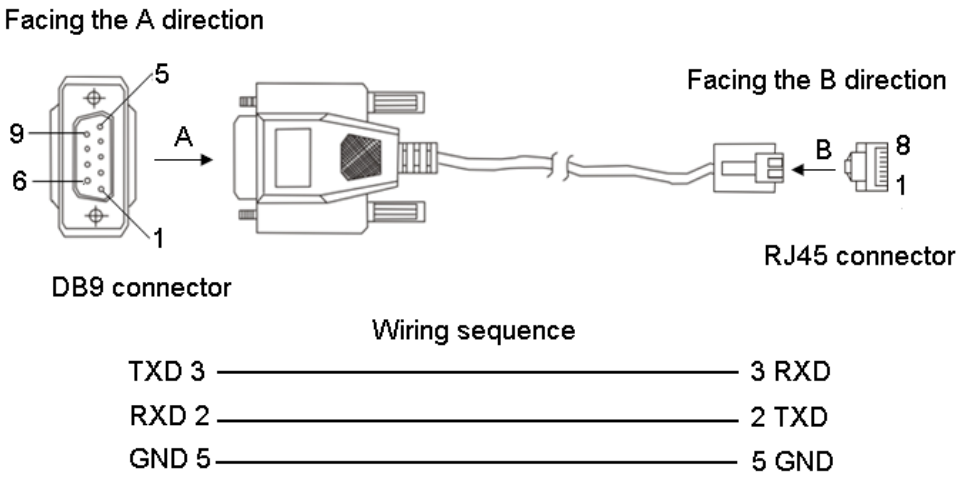

Figure 26 Wiring Sequence of DB9-RJ45 Console Cable

Table 16 Pin Definitions of DB9-RJ45 Console Cable

DB9 Pin	RJ45 Pin	Signal	Description
2	3	RXD	Receive data
3	2	TXD	Transmit data
5	5	GND	Grounding

5.5 Grounding

Grounding protects the switch from lightning and interference. Therefore, you must ground the switch properly. You need to ground the switch before it is powered on and disconnect the

grounding cable after the switch is powered off. The switch provides a grounding screw for chassis grounding. After crimping one end of the grounding cable to a cold pressed terminal, secure the end to the grounding screw and connect the other end to the earth firmly.

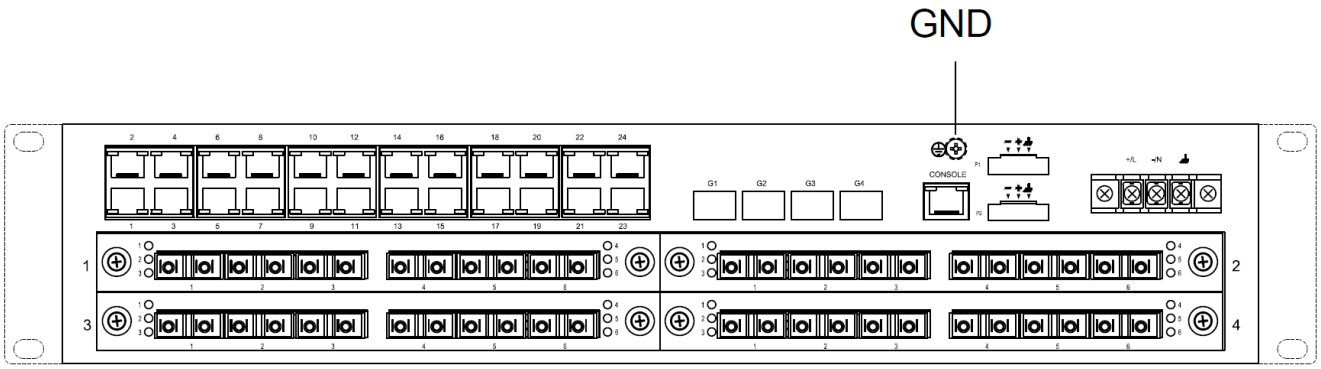

Figure 27 Grounding

Note:

Cross-sectional area of the chassis grounding cable>2.5mm^2; grounding resistance<5Ω.

5.6 Power Terminal Block

There is a power terminal block on the rear panel of the device. You need to connect the power cables to the terminal block to provide power for the device. The device adopts 3-pin 9.5mm-spacing terminal block.

Note:

0.75mm^2<Cross-sectional area of the power cable<2.5mm^2; grounding resistance<5Ω.

- 3-Pin 9.5mm-Spacing Terminal Block

The following figure shows the 3-pin 9.5mm-spacing terminal block.

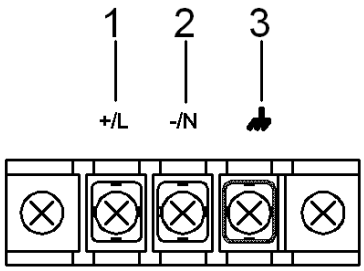

Figure 28 3-Pin 9.5mm-Spacing Terminal Block

The following table lists the pin definitions of the 3-pin 9.5mm-spacing terminal block.

Table 17 Pin Definitions of 3-Pin 9.5mm-Spacing Terminal Block

No.	DC Definition	AC Definition
1	Positive power supply	Live line
2	Negative power supply	Null line
3	--	PGND

- Wiring and Mounting

Step 1: Ground the device properly according to section 5.5.

Step 2: Strip one end of a power cable for 5mm. Twist the exposed copper wires into one bundle, weld the bundle onto a U-shaped terminal, and use a shrinkable tube to protect the welding joint.

Step 3: Loosen the power cable locking screws with a screwdriver. Insert the three U-shaped terminals connected to power cables below the washers according to Table 17. Fasten the power cable locking screws.

Step 4: Connect the other ends of the power cables to an external power supply system according to the power requirements of the device.

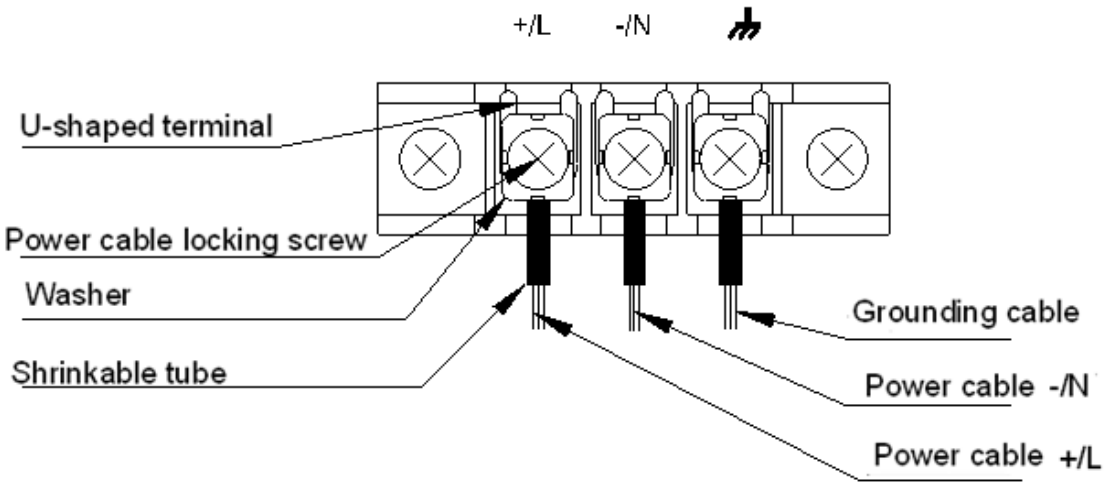

Figure 29 Cable Connection of 3-Pin 9.5mm-Spacing Terminal Block

Caution:

The switch supports 24DC, 48DC, 110DC, and 220AC/DC power input. Before connecting the device to power supply, make sure that the power input meets the power requirement. If connected to an incorrect power input, the device may be damaged.

Warning:

- Do not touch any exposed conducting wire, terminal, or component with a voltage warning sign,

because it may cause damage to humans.

- Do not remove any part or plug in or out any connector when the device is powered on.

6 LEDs

The following table lists the front panel LEDs.

Table 18 Front Panel LEDs

LED	State	Description
Running LED	Blinking	The CPU operates properly.
	On	The CPU operates abnormally or the device is starting up.
	Off	The CPU does not start up.
10/100Base-T(X) Ethernet port speed LED	On	100M working state (100Base-TX)
	Off	10M working state (10Base-T) or no connection
10/100Base-T(X) Ethernet port connection status LED	On	Effective port connection
	Blinking	Ongoing network activities
	Off	No effective port connection
100M port speed LED	On	100M working state
	Off	10M working state or no connection (10/100Base-T(X) port) No connection (100Base-FX port)
100M port connection status LED	On	Effective port connection
	Blinking	Ongoing network activities
	Off	No effective port connection
1000Base-X SFP slot speed LED	On	1000M working state (1000Base-X)
	Off	No connection
1000Base-X SFP slot connection status LED	On	Effective port connection
	Blinking	Ongoing network activities
	Off	No effective port connection

The following table lists the rear panel LEDs, excluding those for interface modules.

Table 19 Rear Panel LEDs

LED	State	Description
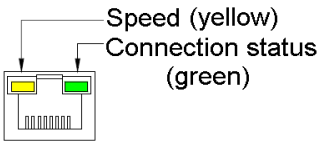		
10/100Base-T(X) Ethernet port speed LED (yellow)	On	100M working state (100Base-TX)
	Off	10M working state (10Base-T) or no connection
10/100Base-T(X) Ethernet port connection status LED (green)	On	Effective port connection
	Blinking	Ongoing network activities
	Off	No effective port connection

The following table lists the LEDs for interface modules.

Table 20 LEDs for Interface Modules

LED	State	Description
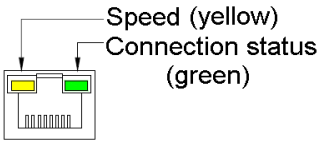		
10/100Base-T(X) Ethernet port speed LED (yellow)	On	100M working state (100Base-TX)
	Off	10M working state (10Base-T) or no connection
10/100Base-T(X) Ethernet port connection status LED (green)	On	Effective port connection
	Blinking	Ongoing network activities
	Off	No effective port connection
100M port connection status LED	On	Effective port connection
	Blinking	Ongoing network activities
	Off	No effective port connection

7 Switch Access

You can access the switch in any of the following ways:

7.1 Access through Console Port

Step 1: Connect the console port of the switch to the 9-pin serial port of a PC with the delivered RJ45-DB9 console cable.

Step 2: Open the Hyper Terminal in the Windows OS. On the desktop, click Start → All Programs → Accessories → Communications → Hyper Terminal.

Step 3: Create a connection "Switch", as shown in the following figure.

Figure 30 Creating a Connection

Step 4: Connect the communication port in use, as shown in the following figure.

Figure 31 Selecting a Serial Port

Note:

To confirm the communication port in use, right-click [My Computer] and select [Property]. Click [Hardware] → [Device Manager] → [Port] to view the communication port.

Step 5: Set port parameters (Bits per second: 9600, Data bits: 8, Parity: None, Stop bits: 1, and Flow control: None), as shown in the following figure.

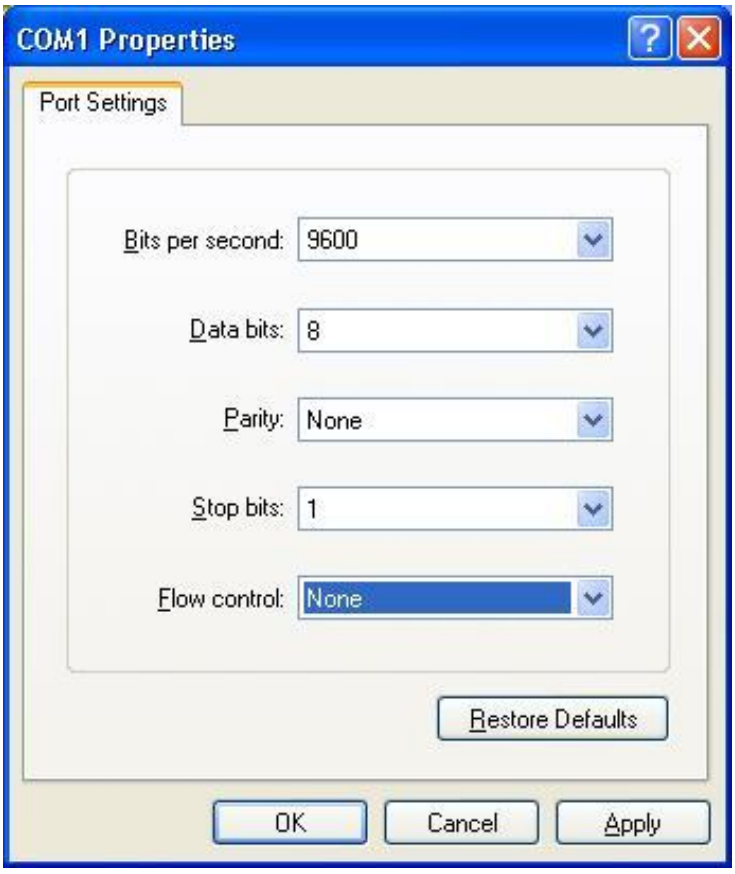

Figure 32 Setting Port Parameters

Step 6: Click OK to enter the switch CLI. Then you can run the following commands to perform operations.

Table 21 CLI Commands

View	Command	Description
User view	SWITCH>enable	Enter the management view.
Management view	SWITCH#show interface	Query the current IP address of the switch.
Management view	SWITCH#show version	Query the version of the switch.
Management view	SWITCH#reboot	Restart the switch.
Management view	SWITCH#load default	Restore the factory default settings (excluding the IP address).
Management view	SWITCH#config terminal	Enter the configuration view.

7.2 Access through Telnet

Step 1: Connect the network port of the PC to the RJ45 port of the switch with an RJ45-RJ45 cable.

Step 2: Enter "telnet *IP address*" in the Run dialog box. For example, if the IP address of the switch is 192.168.0.2 (default IP address of a Kyland switch), enter "telnet 192.168.0.2" in the dialog box.

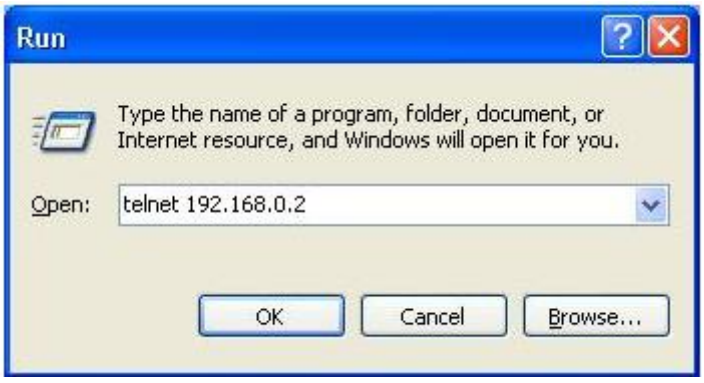

Figure 33 Access through Telnet

Step 3: Click OK. The Telnet CLI is displayed. Then you can enter commands (as listed in Table 21) to perform operations.

7.3 Access through Web

Step 1: Connect the network port of the PC to the RJ45 port of the switch with an RJ45-RJ45 cable.

Step 2: Enter the IP address of the switch in the address box of the browser. The user login interface is displayed. You can log in to the Web UI by default user name "admin" and password "123".

Note:

- IE8.0 or a later version is recommended.
- For details about how to access the switch and other operations, refer to the Web operation manual in the delivered CD.

8 Basic Features and Specifications

Power Requirements		
Power Identifier	Rated Voltage Range	Maximum Voltage Range
24DC	24VDC	18-36VDC
48DC	48VDC	36-72VDC
110DC	110VDC	77-154VDC
220AC/DC	100-240VAC, 50/60Hz; 220VDC	85-264VAC/120-300VDC
Terminal block	3-pin 9.5mm-spacing terminal block	
Rated Power Consumption		
Rated power consumption	39.9W (MAX)	
Physical Characteristics		
Housing	Aluminum, fanless	
Installation	19 inch 2U rack mounting	
Dimensions (W×H×D)	440mm×88mm×245mm (excluding connectors and mounting brackets)	
Weight	6.86Kg	
Environmental Limits		
Operating temperature	-40℃~+85℃	
Storage temperature	-40℃~+85℃	
Ambient relative humidity	5%~95% (non-condensing)	
MTBF		
MTBF	371,000 hours	
Warranty		
Warranty	5 years	

For more information about KYLAND products, please visit our website: http://www.kyland.com